.750

Work Order ID 73349

Wednesday, August 31, 2011 11:07:52 AM

Item ID: D3396-3
Revision ID:
Item Name: Spacer
Start Date: 9/1/2011 **Start Qty:** 20.00 ~~20.00~~ 60.0
Required Date: 9/15/2011 **Req'd Qty:** 20.00
Reference:

Accept

Setup Start
Stop

Cust Item ID:
Customer:

Approvals: **Process Plan:** MMF **Date:** 11-09-01 **Tooling:** _____ **Date:** _____
QC: _____ **Date:** _____ **SPC (Y/N):** _____ **Date:** _____

Run Start
Stop

Sequence ID/ Work Center ID	Operation Description	Set Up/ Run Hours	Tool ID	Tool #	Plan Code	Accept Qty	Reject Qty	Reject Number	Insp. Stamp
Draw Nbr D3396	**Revision Nbr** Rev B								
100 Hardinge	Hardinge CNC LATHE SMALL	0.00				98	0		
Hardinge CNC Lathe Small	**Memo** Turn as per Folio FA514 and Dwg D3396□Deburr	0.00							
110 QC	QC2- Inspect parts off machine FAI/FAIB	0.00					0		
Quality Control	**Memo**	0.00							
120 QC	QC8- Inspect parts - second check	0.00				98	0		
Quality Control	**Memo**	0.00							

Dart Aerospace Ltd

W/O:		WORK ORDER CHANGES					
DATE	STEP	PROCEDURE CHANGE	By	Date	Qty	Approval Chief Eng / Prod Mgr	Approval QC Inspector

Part No: _____ **PAR #:** _____ **Fault Category:** _____ **NCR:** Yes No **DQA:** _____ **Date:** _____

Resolution: _____ **Disposition:** _____ **QA: N/C Closed:** _____ **Date:** _____

NCR:		WORK ORDER NON-CONFORMANCE (NCR)						
DATE	STEP	Description of NC Section A	Corrective Action Section B			Verification Section C	Approval Chief Eng	Approval QC Inspector
			Initial Chief Eng	Action Description Chief Eng	Sign & Date			

NOTE: Date & initial all entries

H:\fFORMS\Quality Assurance\approved QA\NCRWO RevE

Work Order ID 73349

Wednesday, August 31, 2011 11:07:52 AM

Item ID: D3396-3 **Accept** **Setup** **Start**

Revision ID: **Stop**

Item Name: Spacer

Start Date: 9/1/2011 **Start Qty:** 20.00 **Cust Item ID:**

Required Date: 9/15/2011 **Req'd Qty:** 20.00 **Customer:**

Reference:

Approvals: **Process Plan:** _____ **Date:** _____ **Tooling:** _____ **Date:** _____ **Run** **Start**

QC: _____ **Date:** _____ **SPC (Y/N):** _____ **Date:** _____ **Stop**

Sequence ID/ Work Center ID	Operation Description	Set Up/ Run Hours	Tool ID	Tool #	Plan Code	Accept Qty	Reject Qty	Reject Number	Insp. Stamp
130	Identify as per dwg & Stock Location: 52	0.00							
Packaging						11/9/21		98	
	Memo	0.00							
Packaging									
140	QC21- Final Inspection - Work Order Release	0.00						11/9/21	
QC									
	Memo	0.00							
Quality Control									

MF
11-09-21

Dart Aerospace Ltd

W/O:		WORK ORDER CHANGES					
DATE	STEP	PROCEDURE CHANGE	By	Date	Qty	Approval Chief Eng / Prod Mgr	Approval QC Inspector

Part No: _____ **PAR #:** _____ **Fault Category:** _____ **NCR:** Yes No **DQA:** _____ **Date:** _____

Resolution: _____ **Disposition:** _____ **QA: N/C Closed:** _____ **Date:** _____

NCR:		WORK ORDER NON-CONFORMANCE (NCR)						
DATE	STEP	Description of NC Section A	Corrective Action Section B			Verification Section C	Approval Chief Eng	Approval QC Inspector
			Initial Chief Eng	Action Description Chief Eng	Sign & Date			

NOTE: Date & initial all entries

H:\fFORMS\Quality Assurance\approved QA\NCRWO RevE

Picklist Print

Wednesday, August 31, 2011 11:07:49 AM

Work Order ID: 73349

Parent Item: D3396-3

Parent Item Name: Spacer

Start Date: 9/1/2011 **Required Date:** 9/15/2011

Start Qty: 20.00 **Required Qty:** 20.00

Comments: IPP A□05.10.03□New issue□KJ/JLM□

Component Item ID/ Item Name	Replacement Item ID	Mfg/ Purch	Bin Item	Primary Location	Last Location	Route Seq ID	Unit of Measure	Qty on Hand	Qty per Kit	Total Qty	Qty Issued	Date Issued	Status
MDELRINR0.750 Delrin Round Bar 0.75"		Purchased	No			110	f	88.9980	0.0625	1.315789			

Location	Loc Qty	Loc Code
MAT055	88.998	
115472	7.5	
116183	2.4	
117273	9.958	
117322	0.94	
118066	20.2	
118392	48	

3.95 ok 11/09/20

Dart Aerospace Ltd

W/O:		WORK ORDER CHANGES					
DATE	STEP	PROCEDURE CHANGE	By	Date	Qty	Approval Chief Eng / Prod Mgr	Approval QC Inspector

Part No: _____ **PAR #:** _____ **Fault Category:** _____ **NCR:** Yes No **DQA:** _____ **Date:** _____

Resolution: _____ **Disposition:** _____ **QA: N/C Closed:** _____ **Date:** _____

NCR:		WORK ORDER NON-CONFORMANCE (NCR)						
DATE	STEP	Description of NC Section A	Corrective Action Section B			Verification Section C	Approval Chief Eng	Approval QC Inspector
			Initial Chief Eng	Action Description Chief Eng	Sign & Date			

NOTE: Date & initial all entries

H:\fFORMS\Quality Assurance\approved QA\NCRWO RevE

DART AEROSPACE LTD	Work Order:	73349
Description: Spacer	Part Number:	D3396-3
Inspection Dwg: D3396 **Rev:** B		Page 1 of 1

FIRST ARTICLE INSPECTION CHECKLIST

[X] First Article [ ] Prototype

Drawing Dimension	Tolerance	Actual Dimension	Accept	Reject	Method of Inspection	Comments
0.226	+/-0.010	.229	✓		Vern 21-06	
Ø0.316	+0.005/-0.000	Ø.316	✓		"	
Ø0.740	+/-0.010	Ø.740	✓		"	
0.032 x 45°	+/-0.010	.025X45	✓		"	

Measured by:	[signature]	Audited by:	B.A	Prototype Approval:	N/A
Date:	11/09/26	Date:	11/09/21	Date:	N/A

Rev	Date	Change	Revised by	Approved
A	06.03.09	New Issue	KJ/JLM	

Dart Aerospace Ltd

W/O:		WORK ORDER CHANGES					
DATE	STEP	PROCEDURE CHANGE	By	Date	Qty	Approval Chief Eng / Prod Mgr	Approval QC Inspector

Part No: _____ **PAR #:** _____ **Fault Category:** _____ **NCR:** Yes No **DQA:** _____ **Date:** _____

Resolution: _____ **Disposition:** _____ **QA: N/C Closed:** _____ **Date:** _____

NCR:		WORK ORDER NON-CONFORMANCE (NCR)						
DATE	STEP	Description of NC Section A	Corrective Action Section B			Verification Section C	Approval Chief Eng	Approval QC Inspector
			Initial Chief Eng	Action Description Chief Eng	Sign & Date			

NOTE: Date & initial all entries

DESIGN	DRAWN BY	DART AEROSPACE LTD HAWKESBURY, ONTARIO, CANADA	
CP	CP		
CHECKED	APPROVED	DRAWING NO.	REV. B
		D3396	SHEET 1 OF 1
DATE		TITLE	SCALE
05.04.27		SPACER	2:1

A	05.03.10	NEW ISSUE
B	05.04.27	ADD −3

RELEASED
05-09-06

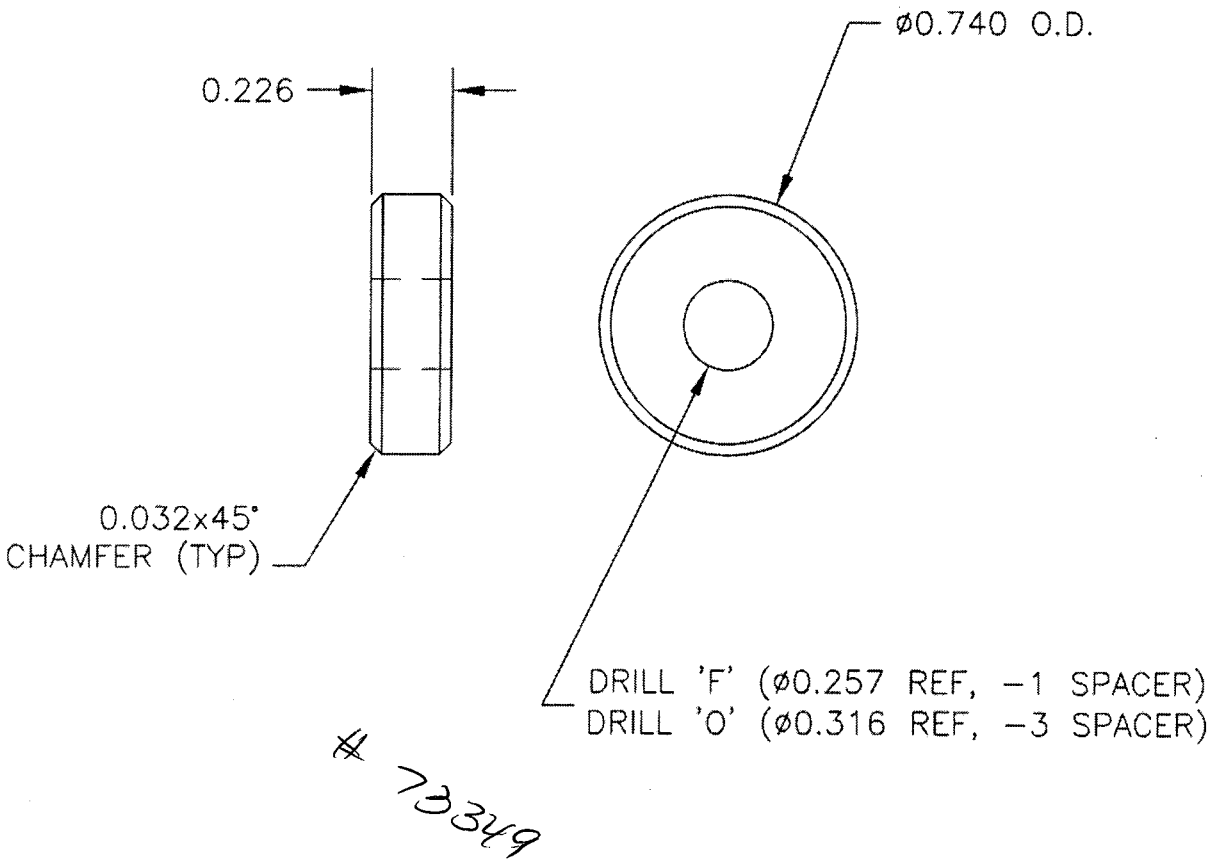

73349

D3396−1/−3 SPACER

1) MATERIAL: DELRIN (DART SPEC. M−DELRIN−R)
2) FINISH: NONE
3) BREAK ALL SHARP EDGES 0.005 TO 0.010
4) TOLERANCES ARE PER DART QSI 018 UNLESS OTHERWISE NOTED
5) ALL DIMENSIONS ARE IN INCHES

Dart Aerospace Ltd

W/O:		WORK ORDER CHANGES					
DATE	STEP	PROCEDURE CHANGE	By	Date	Qty	Approval Chief Eng / Prod Mgr	Approval QC Inspector

Part No: _____ **PAR #:** _____ **Fault Category:** _____ **NCR:** Yes No **DQA:** _____ **Date:** _____

Resolution: _____ **Disposition:** _____ **QA: N/C Closed:** _____ **Date:** _____

NCR:		WORK ORDER NON-CONFORMANCE (NCR)						
DATE	STEP	Description of NC Section A	Corrective Action Section B			Verification Section C	Approval Chief Eng	Approval QC Inspector
			Initial Chief Eng	Action Description Chief Eng	Sign & Date			

NOTE: Date & initial all entries

H:\fFORMS\Quality Assurance\approved QA\NCRWO RevE